Summary in Graph

Exam Summary (GO Classes CS | Digital Logic | Boolean Algebra | Weekly Quiz 2)

Qs. Attempted:	0 (0 + 0)	Correct Marks:	0 (0 + 0)
Correct Attempts:	0 (0 + 0)	Penalty Marks:	0 (0 + 0)
Incorrect Attempts:	0 (0 + 0)	Resultant Marks:	0 (0 + 0)

Total Questions:	10 (5 + 5)
Total Marks:	15 (5 + 10)
Exam Duration:	30 Minutes
Time Taken:	0 Minutes

Individual Question Statistics

Select Metric: Marks Obtained

Q1 Q2 Q3 Q4 Q5 Q6 Q7 Q8 Q9 Q10

* Average Stats based on first-attempt stats of Top 10% (51) out of 510 users

EXAM RESPONSE EXAM STATS FEEDBACK

Technical

Q #1 Multiple Choice Type Award: 1 Penalty: 0.33 Digital Logic

If $f(a,b,c) = a + b + c$ so, what is the value of $f\left[a, b, (ab)'\right]$?

A. 0
B. 1
C. ab
D. a'b'

Your Answer: | Correct Answer: B | Not Attempted | Time taken: 00min 00sec | Discuss

Q #2 Multiple Choice Type | Award: 1 | Penalty: 0.33 | Digital Logic

What is the simplified form for the following boolean expression:

$$F(x,y,z) = xyz + \overline{(\bar{x}+yz)} + \overline{(\bar{x}y)}z$$

A. xyz
B. $x+y$ 'z
C. $y+xz$
D. $x'(y+z)$

Your Answer: | Correct Answer: B | Not Attempted | Time taken: 00min 00sec | Discuss

Q #3 Multiple Choice Type | Award: 1 | Penalty: 0.33 | Digital Logic

If the boolean function $F = (A'B+BD+C)' + (B'CDA) + (CA'+AC+D'E)'$, what is the value of $F.F'$?

A. $A+B+C+D$
B. 1
C. $A'B$
D. 0

Your Answer: | Correct Answer: D | Not Attempted | Time taken: 00min 00sec | Discuss

Q #4 Multiple Choice Type | Award: 1 | Penalty: 0.33 | Digital Logic

Consider the function $f(x,y)$ where $\oplus$ is an Exclusive OR operator:
$f(x,y) = (xy) \oplus (x'+y) \oplus (x+y') \oplus (xy') \oplus (x'+y')$
What is the value of $f(1,y).f(0,y)$?

A. 0
B. 1
C. $x+y$ '
D. y'

Your Answer: | Correct Answer: D | Not Attempted | Time taken: 00min 00sec | Discuss

Q #5 Multiple Select Type | Award: 1 | Penalty: 0 | Digital Logic

Which of the following boolean equations is/are correct?

A. $xy + xy' = x$
B. $(x+y)(x+y') = y$
C. $xyz + x'y + xyz' = y$
D. $(A+B)'(A'+B')' = 0$

Your Answer: | Correct Answer: A;C;D | Not Attempted | Time taken: 00min 00sec | Discuss

Q #6 Multiple Choice Type Award: 2 Penalty: 0.67 Digital Logic

The combinatorial circuit shown below takes three 1-bit inputs: A, B, and C, and produces one 1-bit output. The relationship between the inputs and the output is shown below as a truth table. The circuit contains two identical, unknown gates X.

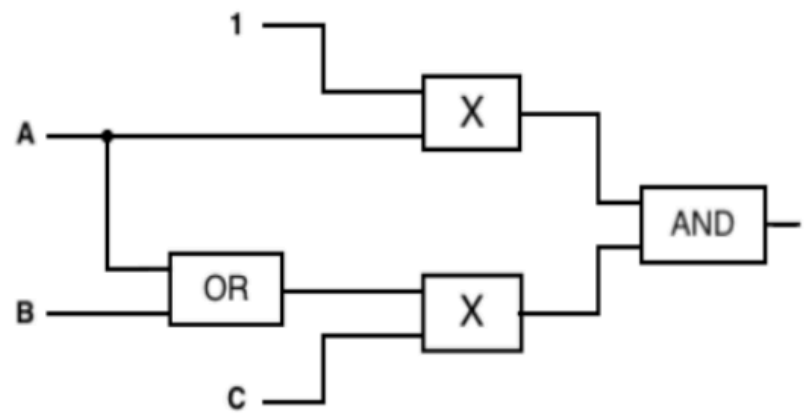

A	B	C	Out
0	0	0	0
0	0	1	1
0	1	0	1
0	1	1	0
1	0	0	0
1	0	1	0
1	1	0	0
1	1	1	0

What is gate X ?

A. AND
B. XNOR
C. NAND
D. XOR

Your Answer: Correct Answer: D Not Attempted Time taken: 00min 00sec Discuss

Q #7 Multiple Choice Type Award: 2 Penalty: 0.67 Digital Logic

The inhibition operation, also known as the AND-NOT operation, is a digital logic function where the output is true (i.e. 1) only if the first input is true (i.e. 1) and the second input is false (i.e. 0). In other words, it produces a high output only when the controlling input (first input) is high and the inhibited input (second input) is low.
Now consider the following two statements:
S1: The inhibition operation is neither commutative nor associative.
S2: The exclusive-OR operation is commutative and associative.
Which of the following statement(s) is/are correct?

A. Only S1
B. Only S2
C. Neither S1 nor S2
D. Both S1 and S2

Your Answer: Correct Answer: D Not Attempted Time taken: 00min 00sec Discuss

Q #8 Multiple Choice Type Award: 2 Penalty: 0.67 Digital Logic

Determine the input conditions needed to produce $x = 1$ for the circuit below.

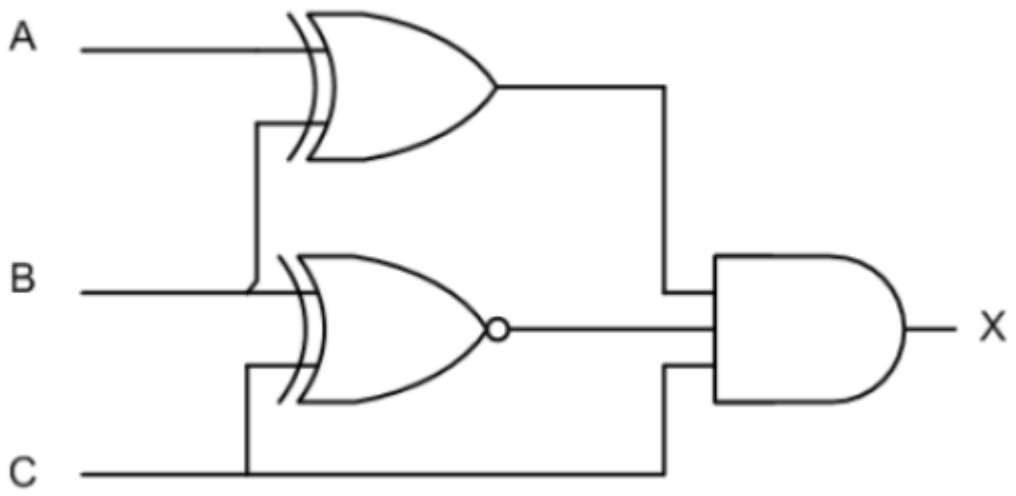

A. $A = 1 \cdot B = 0, C = 0$
B. $A = 0, B = 0, C = 1$
C. $A = 1, B = 1, C = 0$
D. $A = 0, B = 1, C = 1$

Your Answer: | Correct Answer: D | Not Attempted | Time taken: 00min 00sec | Discuss

Q #9 | Multiple Choice Type | Award: 2 | Penalty: 0.67 | Digital Logic

The complement of the function $F1 = \left((AB')' + C\right) D' + AC'$ is:

A. $A'D + CD$
B. $(A + B')\,C$
C. $(A' + B)\,(C' + D)$
D. $(A + B')\,(C + D')$

Your Answer: | Correct Answer: A | Not Attempted | Time taken: 00min 00sec | Discuss

Q #10 | Multiple Select Type | Award: 2 | Penalty: 0 | Digital Logic

Which of the following boolean equations is/are correct?

A. $(a'c')'\,(a + c') + b + (b' + c')' = a + b$
B. $a'c + ab' + (a + c)' + ab = 1$
C. $c\,(ab + ab') + (a + b)'c = a + b'$
D. $\left((b + b')' + (a + c)\,(a + c')\right)\left(a'\,(a' + b)\right) = 0$

Your Answer: | Correct Answer: A;B;D | Not Attempted | Time taken: 00min 01sec | Discuss

Copyright & Stuff